NS2 Series Manual Motor Starters





NS2-25、NS2-32 NS2-25G、NS2-32G





NS2-25X、NS2-32X S2-25XG、NS2-32XG



NS2-32H

1.General

1.1 Certificates: SEMKO, CE, UkrSEPRO, EAC, UL;
1.2 Electric ratings: AC690V, 25A, 32A, 80A;
1.3 Standard: IEC/EN 60947-2, IEC60947-4-1

2.Type designation

N S 2 - □ □ □ / □ □

- Current specifications
- Accessories specifications (none, can be omitted)
- Code of appearance
- Code of structural modification
- Frame size rated current(A)
- Design sequence No.
- AC motor starter
- Company code

3. Operating conditions

3.1 Temperature: -5℃～ +40℃ ,
average temperature in 24 hours not exceed +35℃
3.2 Altitude: not exceed 2000m
3.3 Air conditions:
At mounting site, relative humidity not exceed 50% at the max temperature of +40℃ , higher relative humidity is allowable under lower temperature,
for example, RH could be 90% at +20℃
3.4 Pollution grade: Grade Ⅲ
3.5 Trip class:
10A(NS2-25, NS2-25X, NS2-32, NS2-32X,NS2-32H,NS2-80)
3.6 Rated operational system:
eight-hour day (working system)
3.7 Mounting conditions:
The inclination between the mounting plane and the vertical plane shall not exceed 5°
The product shall be installed and operated at a place without obvious shake, impact and vibration.

4. Technical data

4.1 Rated insulation voltage Ui(V):690
4.2 Rated operating voltage Ue(V):AC230/240,AC400/415,AC440,AC500,AC690.
4.3 Rated frequency (Hz):50/60.
4.4 Rating current of frame class Inm (A):25(NS2-25,25X),32(NS2-32,32X NS2-32H), 80(NS2-80)
4.5 Rated current of release In (A):(see table4).
4.6 Setting current range:(see table4).
4.7 Rated limit short circuit breaking capacity Icu (kA):(see table4).
4.8 Short circuit breaking capability Ics (kA) for rated operation:(see table4).
4.9 Rated shock tolerance voltage Uimp (kV):8.
4.10 Selective category (Class A or B) and application category:Class A and AC-3
4.11 Insulation length (mm):10;15(NS2-80) Before inserting conductor (conductor/conductor bar) into terminal
4.12 Cross-sectional area of conductor (conductor/conductor bar)mm^2:1-6;2.5~25 (NS2-80)



NS2-80



NS2-80G

4.13 Maximum number of roots allowed to clip into the conductor (conductor/conductor bar):2;1(NS2-80)

4.14 Screw (or bolt) size of wiring end:M4;M8(NS2-80)

4.15 Terminal screw tightening torque (N.m):1.7;6(NS2-80)

4.16 Operation frequency (times/hour):≤30;≤25(NS2-80)

Notel :Frame of 32 or below:For switching from off to on,a minimum interval of 110 seconds is required;for switching from on to off,a minimum interval of 10 seconds is reguired

Note2:Frame of 80:For switching from off to on,a minimum interval of 1 32 seconds is required;forswitching from on to off,a minimum interval of 12 seconds is required

4.17 Adaptable contactor:NC1;NC8,NXC

4.18 Action characteristics of each phase of the starter when load balancing (see Table 1).

Table 1

Series No.	Multiple of setting current	Initial status	Time		Expected results	Ambient temperature
1	1.05	Cold status	t≥2h		Non-tripping	+20℃ ±2℃
2	1.20	Heat status (right after test.1)	t<2h		Tripping	+20℃ ±2℃
3	1.50	Heat status (right after test.1)	Tripping class	10A t<2min	Tripping	+20℃ ±2℃
4	7.20	Cold status	Tripping class	10A 2s<t≤10s	Tripping	+20℃ ±2℃

4.19 The action characteristics of phase failure protection properties (see Table 2)

Table 2

Series No.	Multiple of setting current		Initial status	Time	Expected results	Ambient temperature
	Any 2 phases	The other phase				
1	1.0	0.9	Cold status	t≥2h	Non-tripping	+20℃ ±2℃
2	1.15	0	Heat status (right after test.1)	t<2h	Tripping	+20℃ ±2℃

4.20 The action characteristics owf temperature compensation properties (see Table 3)

Table 3

Series No.	Multiple of setting current	Initial status	Time	Expected results	Ambient temperature
1	1.0	Cold status	t≥2h	Non-tripping	+40℃ ±2℃
2	1.2	Heat status (right after test.1)	t<2h	Tripping	+40℃ ±2℃
3	1.5	Heat status (through 1.0 times rated current, after thermal equilibrium is reached)	t<2min	Tripping	+40℃ ±2℃
4	1.05	Cold status	t≥2h	Non-tripping	-5℃ ±2℃
5	1.3	Heat status (right after test.3)	t<2h	Tripping	-5℃ ±2℃
6	1.5	Heat status (through 1.0 times rated current, after thermal equilibrium is reached)	t<4min	Tripping	-5℃ ±2℃

4.13 Technical parameters(See table 4)

Table 4

Type	Rated current of release In(A)	Setting current regulation range (A)	Rated ultimate short-circuit breaking Icu, Rated service short-circuit breaking capacity Ics				Arcing distance (mm)
			400/415V		690V		
			Icu	Ics	Icu	Ics	
NS2-25(X)、NS2-25(X)G	0.16	0.1 ~ 0.16	100	100	100	100	40
NS2-25(X)、NS2-25(X)G	0.25	0.16 ~ 0.25	100	100	100	100	40
NS2-25(X)、NS2-25(X)G	0.4	0.25 ~ 0.4	100	100	100	100	40
NS2-25(X)、NS2-25(X)G	0.63	0.4 ~ 0.63	100	100	100	100	40
NS2-25(X)、NS2-25(X)G	1	0.63 ~ 1	100	100	100	100	40
NS2-25(X)、NS2-25(X)G	1.6	1 ~ 1.6	100	100	100	100	40
NS2-25(X)、NS2-25(X)G	2.5	1.6 ~ 2.5	100	100	3	2.25	40
NS2-25(X)、NS2-25(X)G	4	2.5 ~ 4	100	100	3	2.25	40
NS2-25(X)、NS2-25(X)G	6.3	4 ~ 6.3	100	100	3	2.25	40
NS2-25(X)、NS2-25(X)G	10	6 ~ 10	100	100	3	2.25	40
NS2-25(X)、NS2-25(X)G	14	9 ~ 14	15	7.5	3	2.25	40
NS2-25(X)、NS2-25(X)G	18	13 ~ 18	15	7.5	3	2.25	40
NS2-25(X)、NS2-25(X)G	23	17 ~ 23	15	6	3	2.25	40
NS2-25(X)、NS2-25(X)G	25	20 ~ 25	15	6	3	2.25	40
NS2-32(X)	32	24 ~ 32	10	5	3	2.25	40
NS2-32H	0.16	0.1 ~ 0.16	100	100	100	100	40
NS2-32H	0.25	0.16 ~ 0.25	100	100	100	100	40
NS2-32H	0.4	0.25 ~ 0.4	100	100	100	100	40
NS2-32H	0.63	0.4 ~ 0.63	100	100	100	100	40
NS2-32H	1	0.63 ~ 1	100	100	100	100	40
NS2-32H	1.6	1 ~ 1.6	100	100	100	100	40
NS2-32H	2.5	1.6 ~ 2.5	100	100	4	4	40
NS2-32H	4	2.5 ~ 4	100	100	4	4	40
NS2-32H	6.3	4 ~ 6.3	100	100	4	4	40
NS2-32H	10	6 ~ 10	100	100	4	4	40
NS2-32H	14	9 ~ 14	50	25	4	4	40
NS2-32H	18	13 ~ 18	50	25	4	4	40
NS2-32H	23	17 ~ 23	50	25	4	4	40
NS2-32H	25	20 ~ 25	50	25	4	4	40
NS2-32H	32	24 ~ 32	50	25	4	4	40
NS2-80、NS2-80G	25	20~25	50	17.5	4	2	50
NS2-80、NS2-80G	32	23~32	50	17.5	4	2	50
NS2-80、NS2-80G	40	30~40	50	17.5	4	2	50
NS2-80、NS2-80G	50	37~50	50	17.5	4	2	50
NS2-80、NS2-80G	65	48~65	50	17.5	4	2	50
NS2-80、NS2-80G	80	63~80	50	17.5	4	2	50

4.13.1 Rated power of three phase motor controlled by starter(See table 5)

Table 5

Type	Rated current of release In(A)	Setting current regulation range (A)	Standard Rated Power Three Phase Motor(kW) AC-3,50Hz/60Hz					
			230/240V	400V	415V	440V	500V	690V
NS2-25(X)、NS2-25(X)G、NS2-32H	0.16	0.1-0.16	-	-	-	-	-	-
	0.25	0.16-0.25	-	-	-	-	-	-
	0.4	0.25-0.4	-	-	-	-	-	-
	0.63	0.4-0.63	-	-	-	-	-	0.37
	1	0.63-1	-	-	-	0.37	0.37	0.55
	1.6	1-1.6	-	0.37	-	0.55	0.75	1.1
	2.5	1.6-2.5	0.37	0.75	0.75	1.1	1.1	1.5
	4	2.5-4	0.75	1.5	1.5	1.5	2.2	3
	6.3	4-6.3	1.1	2.2	2.2	3	3.7	4
	10	6-10	2.2	□	□	4	5.5	7.5
	14	9-14	3	5.5	5.5	7.5	7.5	9
	18	13-18	4	7.5	9	9	9	11
	23	17-23	5.5	11	11	11	11	15
	25	20-25	5.5	11	11	11	15	18.5
NS2-32(X)、NS2-32(X)G、NS2-32H	32	24-32	7.5	15	15	15	18.5	25
NS2-80、NS2-80G	25	20-25	-	11	11			18.5
	32	23-32	-	15	15	-	-	22
	40	30-40	-	18.5	18.5	-	-	37
	50	37-50	-	22	22	-	-	45
	65	48-65	-	30	30	-	-	55
	80	63-80	-	37	37	-	-	63

4.13.2 Currentsetting value of instantaneous electromagnetic release (See Table 6)

Table 6

Type	Read current of release In(A)	Regulating range of setting current of thermal element(A)	Currentsetting value of instantaneous electromagnetic release Ii(A)
NS2-25(X)、NS2-25(X)G、NS2-32H	0.16	0.1-0.16	1.5
	0.25	0.16-0.25	2.4
	0.4	0.25-0.4	5
	0.63	0.4-0.63	8
	1	0.63-1	13
	1.6	1-1.6	22.5
	2.5	1.6-2.5	33.5
	4	2.5-4	51
	6.3	4-6.3	78
	10	6-10	138
	14	9-14	170
	18	13-18	223
	23	17-23	327
	25	20-25	327
NS2-32(X)、NS2-32(X)G、NS2-32H	32	24-32	416
NS2-80、NS2-80G	25	20-25	350
	32	23-32	448
	40	30-40	560
	50	37-50	700
	65	48-65	910
	80	63-80	1120

4.14.1 Action characteristics of instantaneous electromagnetic trip of starter (See Table 6)

Table 7

Test current	Initial state	Set time	Expected results	Ambientair temperature
0.8Ii	Cold st ate	t≥0.2s	No trip	+20℃ ±5℃
1.2Ii	Cold st ate	t<0.2s	Trip	+20℃ ±5℃

4.15 Selection of backup fuse

When the expected short-circuit current of the installation site is greater than the rated limit short-circuit breaking capacity of the starter, the type and melt current specification of the backup short-circuit protection fuse shall be provided. For example, gG type fuse can be selected. (See Table 8)

Table 8

Type	Rated current of release In(A)	Setting currentregulation range (A)	Current rating of fuse-link of back-up fuse,which Icc>Icu									
			230/240V		400/415V		440V		500V		690V	
			aM A	gL/gG A	aM A	gL/gG A	aM A	gL/gG A	aM A	gL/gG A	aM A	gL/gG A
NS2-25(X)、NS2-25(X)G	0.16	0.1-0.16	★	★	★	★	★	★	★	★	★	★
NS2-25(X)、NS2-25(X)G	0.25	0.16-0.25	★	★	★	★	★	★	★	★	★	★
NS2-25(X)、NS2-25(X)G	0.4	0.25-0.4	★	★	★	★	★	★	★	★	★	★
NS2-25(X)、NS2-25(X)G	0.63	0.4-0.63	★	★	★	★	★	★	★	★	★	★
NS2-25(X)、NS2-25(X)G	1	0.63-1	★	★	★	★	★	★	★	★	★	★
NS2-25(X)、NS2-25(X)G	1.6	1-1.6	★	★	★	★	★	★	★	★	★	★
NS2-25(X)、NS2-25(X)G	2.5	1.6-2.5	★	★	★	★	★	★	★	★	16	20
NS2-25(X)、NS2-25(X)G	4	2.5-4	★	★	★	★	★	★	★	★	25	32
NS2-25(X)、NS2-25(X)G	6.3	4-6.3	★	★	★	★	50	63	50	63	32	40
NS2-25(X)、NS2-25(X)G	10	6-10	★	★	★	★	50	63	50	63	32	40
NNS2-25(X)、NS2-25(X)G	14	9-14	★	★	63	80	50	63	50	63	40	50
NS2-25(X)、NS2-25(X)G	18	13-18	★	★	63	80	50	63	50	63	40	50
NS2-25(X)、NS2-25(X)G	23	17-23	80	100	80	100	63	80	50	63	40	50
NS2-25(X)、NS2-25(X)G	25	20-25	80	100	80	100	63	80	50	63	40	50
NS2-25(X)、NS2-25(X)G	32	24-32	80	100	80	100	63	80	50	63	40	50
NS2-32H	0.16	0.1-0.16	★	★	★	★	★	★	★	★	★	★
NS2-32H	0.25	0.16-0.25	★	★	★	★	★	★	★	★	★	★
NS2-32H	0.4	0.25-0.4	★	★	★	★	★	★	★	★	★	★
NS2-32H	0.63	0.4-0.63	★	★	★	★	★	★	★	★	★	★
NS2-32H	1	0.63-1	★	★	★	★	★	★	★	★	★	★
NS2-32H	1.6	1-1.6	★	★	★	★	★	★	★	★	★	★
NS2-32H	2.5	1.6-2.5	★	★	★	★	★	★	★	★	20	25
NS2-32H	4	2.5-4	★	★	★	★	★	★	★	★	25	32
NS2-32H	6.3	4-6.3	★	★	★	★	★	★	★	★	40	50
NS2-32H	10	6-10	★	★	★	★	★	★	50	63	40	50
NS2-32H	14	9-14	★	★	★	★	50	63	50	63	50	63
NS2-32H	18	13-18	★	★	100	125	63	80	50	63	50	63
NS2-32H	23	17-23	★	★	100	125	80	100	50	63	50	63
NS2-32H	25	20-25	★	★	100	125	80	100	50	63	50	63
NS2-32H	32	24-32	★	★	100	125	80	100	50	63	50	63
NS2-80、NS2-80G	25	20-25	-	-	250	315	-	-	-	-	160	200
NS2-80、NS2-80G	32	23-32	-	-	250	315	-	-	-	-	160	200
NS2-80、NS2-80G	40	30-40	-	-	250	315	-	-	-	-	160	200
NS2-80、NS2-80G	50	37-50	-	-	315	400	-	-	-	-	200	250
NS2-80、NS2-80G	65	48-65	-	-	315	400	-	-	-	-	200	250
NS2-80、NS2-80G	80	63-80	-	-	315	400	-	-	-	-	200	250

5.1 Starters accessories

5.1.1 Type, model and specifications of accessories (See Table 9).

Table 9

Description of accessories	Accessories Model				Accessories Specifications
	NS2-25, NS2-32 applies	NS2-25X, NS2-32X applies	NS2-32H applies	NS2-80 applies	
Undervoltage release	NS2-UV110	NS2-UV110	NS2-UV110	NS2-UV110	110~115V, 50Hz; 127V,60Hz
	NS2-UV220	NS2-UV220	NS2-UV220	NS2-UV220	220~240V, 50Hz
	NS2-UV380	NS2-UV380	NS2-UV380	NS2-UV380	380~400V, 50Hz; 440V,60Hz
Shunt release	NS2-SH110	NS2-SH110	NS2-SH110	NS2-SH110	110~115V, 50Hz; 127V,60Hz
	NS2-SH220	NS2-SH220	NS2-SH220	NS2-SH220	220~240V, 50Hz
	NS2-SH380	NS2-SH380	NS2-SH380	NS2-SH380	380~400V, 50Hz; 440V,60Hz
Instantaneous auxiliary contact (front hanging)	NS2-AE20	NS2-AE20	NS2-AE20	NS2-AE20	2NO
	NS2-AE11	NS2-AE11	NS2-AE11	NS2-AE11	1NO+1NC
Instantaneous auxiliary contact (side hanging)	NS2-AU20	NS2-AU20	NS2-AU20	NS2-AU20(NS2-80)	2NO
	NS2-AU11	NS2-AU11	NS2-AU11	NS2-AU11(NS2-80)	1NO+1NC
Fault signal contact and instantaneous auxiliary contact	NS2-FA0110	NS2-FA0110	NS2-FA0110	-	1NC+1NO
	NS2-FA0101	NS2-FA0101	NS2-FA0101	-	1NC+1NC
	NS2-FA1010	NS2-FA1010	NS2-FA1010	-	1NO+1NO
	NS2-FA1001	NS2-FA1001	NS2-FA1001	-	1NO+1NC
Waterproof mounting box	NS2-MC	WPB-1	-	-	-
Mounting box with emergency stop button	NS2-MC01	-	-	-	-

5.1.2 Undervoltage trip device

NS2-UV110, UV220, UV380, performance:

a. Rated insulation voltage Ui (V): 690;

b. Rated impulse withstand voltage Uimp (kV):6;

c. Operating characteristics: When the voltage drops to 70% and 35% of the rated voltage range, undervoltage trip device shall act;

Undervoltage trip device in the power supply voltage is less than 35% of the rated voltage of the trip device, the undervoltage trip device should be able to prevent the starter from closing;

when the power supply voltage is equal to or greater than 85% of the rated voltage of the trip device, the undervoltage trip device should guarantee closure of the starter.

NS2-UV



5.1.3 The characteristics of the shunt trip

NS2-SH110, SH220, SH380:

a. Rated insulation voltage Ui (V): 690;

b. Rated impulse withstand voltage Uimp (kV):6;

c. Operating characteristics: the operating voltage range of the shunt trip device is rated working voltage of 70% ~ 110%.

NS2-SH



5.1.4 Characteristics of the instantaneous auxiliary contact NS2-Ae20, AE11 (front hanging)

a. rated insulation voltage Ui (V): 250;

b. conventional thermal current Ith (A): 2.5;

c. Rated impulse withstand voltage Uimp (kV): 2.5;

d.type , rated voltage and rated operating current (see Table 11) of instantaneous auxiliary contacts.

NS2-AE



Table 10

Utilization category	AC-15				DC-13		
Rated operating voltage Ue(V)	24	48	110/127	230/240	24	48	60
Rated operating current Ie(A)	2	1.25	1	0.5	1	0.3	0.15
Normal operating power P(W)	48	60	127	120	24	15	9

NS2-AU

5.1.5 Instantaneous auxiliary contact NS2-AU20, AU11

performance (side hanging):

a. rated insulation voltage Ui (V): 690;

b. conventional thermal current Ith (A): 6;

c. Rated impulse withstand voltage Uimp (kV):4;

d. type, rated voltage and rated operating current of the instantaneous auxiliary contacts(See Table 11).



Table 11

Utilization category	AC-15							DC-13				
Rated operating voltage Ue (V)	48	110/127	230/240	380/415	440	500	690	24	48	60	110	220
Rated operating current Ie (A)	6	4.5	3.3	2.2	1.5	1	0.6	6	5	3	1.3	0.5
Normal operating power P (W)	300	500	720	850	650	500	400	140	240	180	140	120

NS2-FA

5.1.6 Characteristics of the fault signal contact and instantaneous auxiliary contact NS2-FA

Fault signal contact and instantaneous auxiliary contact NS2-FA, consist of the fault signal contact and instantaneous auxiliary contact. They have different use types and characteristics.

a. rated insulation voltage Ui (V): 690;

b. conventional thermal currents of instantaneous auxiliary contacts: Ith (A) : 6, conventional thermal current of fault signal contacts Ith (A): 2.5;

c. Rated impulse withstand voltage of fault signal contact Uimp (kV):2.5; Rated impulse withstand voltage of instantaneous auxiliary contact Uimp (kV):4;

d. the use type, rated voltage and rated work current (see Table 12) of the instantaneous auxiliary contact same as the NS2-AU instantaneous auxiliary contact; the use type, rated voltage and rated operating current (See Table 12) of the fault signal contacts.



Table 12

Utilization category	AC-14				DC-13		
Rated operating voltage Ue (V)	24	48	110/127	230/240	24	48	60
Rated operating current Ie (A)	1.5	1	0.5	0.3	1	0.3	0.15
Normal operating power P (W)	36	48	72	72	24	15	9
Operating performance (time)	1000	1000	1000	1000	1000	1000	1000

5.1.7 Non-normal making and breaking capacity (see Table 14) of fault signal contact and instantaneous auxiliary contact.(See Table 13)

Table 13

Use type	Connection		Disconnection				On-off operation cycles and operating frequency		
	I/Ie	U/Ue	CosΦ or T0.95	I/Ie	U/Ue	CosΦ or T0.95	Operating cycles	Operating cycles per minutes	Energize Time
AC-14	6	1.1	0.7	6	1.1	0.7	10	2	0.05
AC-15	10	1.1	0.3	10	1.1	0.3	10	2	0.05
DC-13	1.1	1.1	6Pe	1.1	1.1	6Pe	10	2	0.05

Note: Pe≥50W, T0.95 upper limit≈6Pe≤300ms.

5.1.8 Other parameters (See Table 14)

Table 13

Model	Model of matched fuse	Rated current of supporting fuse A	Rated limiting short circuit current Iq kA	Enclosure protection class
NS2-AE20,AE11	gG、RT36-00	6	1	IP20
NS2-AU20,AU11		10		
NS2-FA				

5.1.9 Mounting box （NS2-MC、NS2-MC01）

	NS2-MC Waterproof installation box	IP55
	NS2-MC01 Installation box with emergency stop button	IP55
	WPB-1 Waterproof installation box	IP55

5.20 Conversion connectors(CC02-S2,CC03-S2,CC08-S2)

	Model	Main technical parameters	Applicable starter	Applicable contactor
	CC02-S2 Conversion connectors	Ui:690V; Ue:690V Iemax:22A;IP20	NS2-25G NS2-25XG	NXC-06~16 NXC-18~22
	CC03-S2 Conversion connectors	Ui:690V; Ue:690V Iemax:32A;IP20	NS2-32G NS2-32XG	NXC-25~38
	CC08-S2 Conversion connectors	Ui:690V; Ue:690V Iemax:65A;IP20	NS2-80G	NXC-40~65

6. Overall and mounting dimension (mm)

NS2-25, NS2-32, NS2-25G, NS2-32G

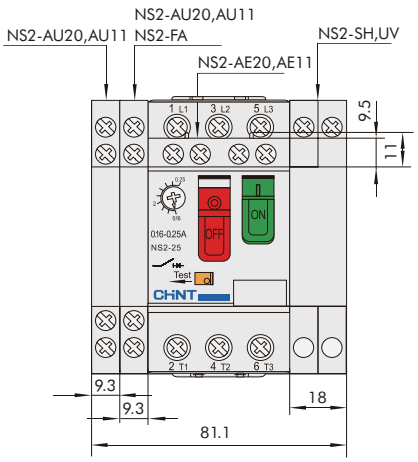

NS2-25X, NS2-32X, NS2-32H, NS2-25XG, NS2-32XG

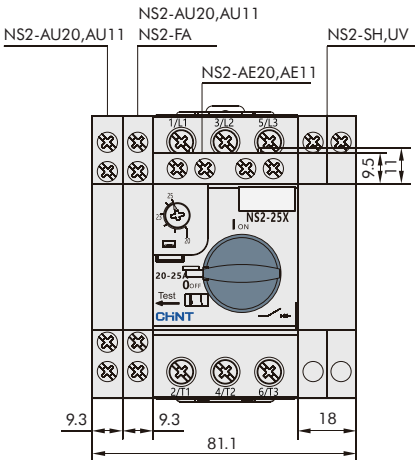

NS2-25, NS2-32, NS2-25G, NS2-32G

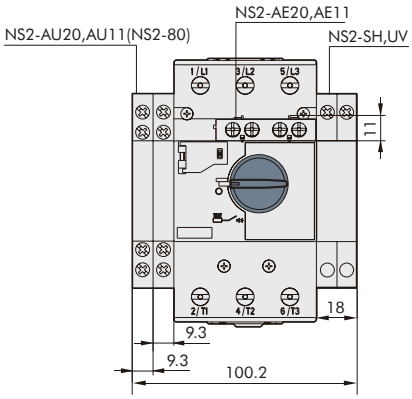

NS2-80, NS2-80G

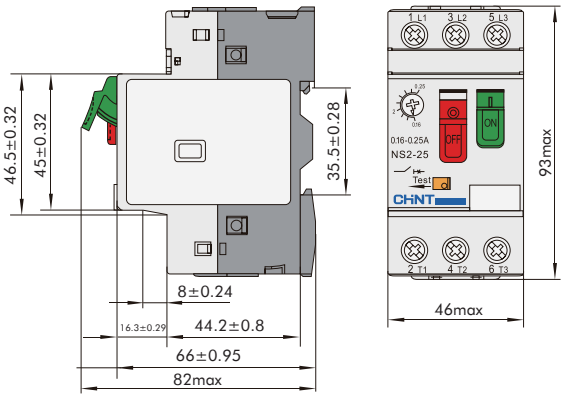

NS2-25X, NS2-32X, NS2-25XG, NS2-32XG

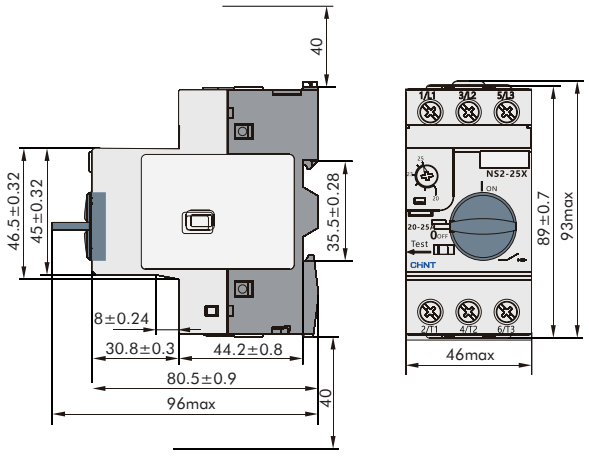

NS2-32H

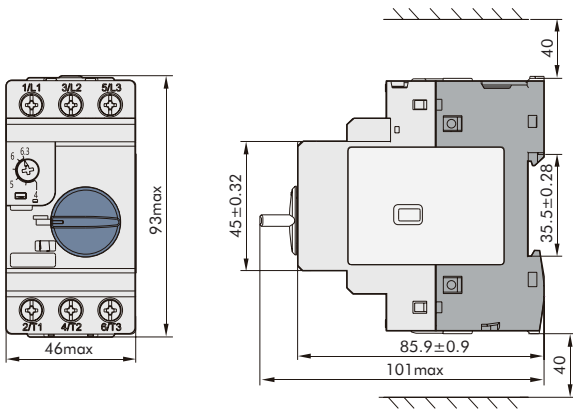

NS2-80B, NS2-80BG

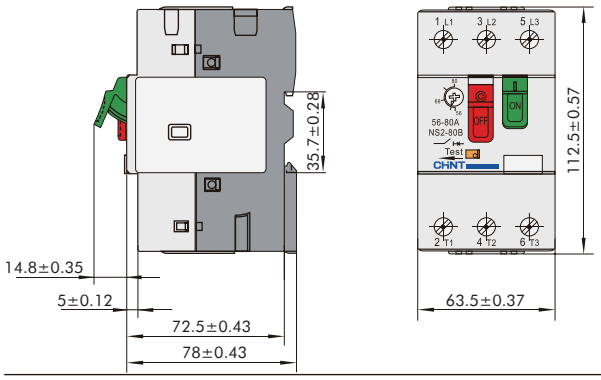

NS2-80, NS2-80G

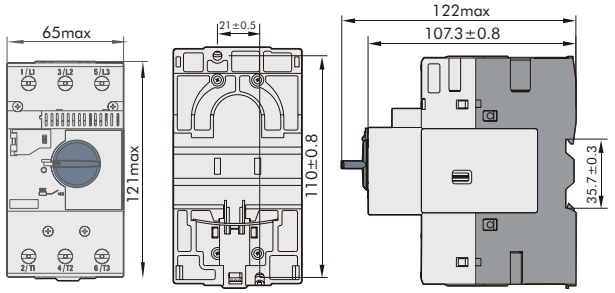

NS2-MC

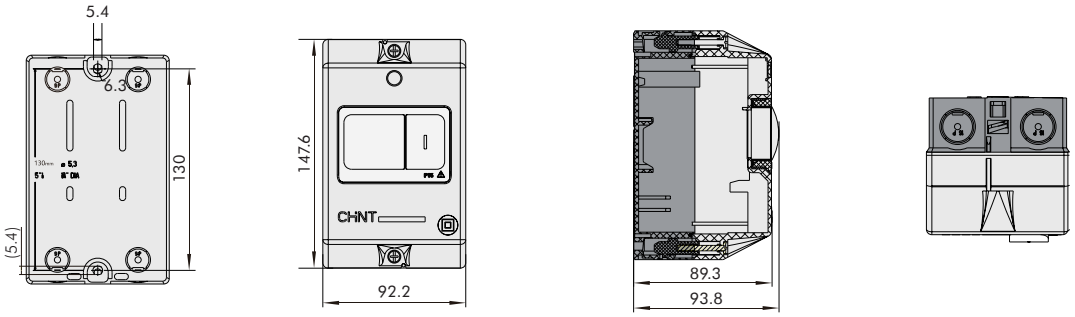

NS2-MC01

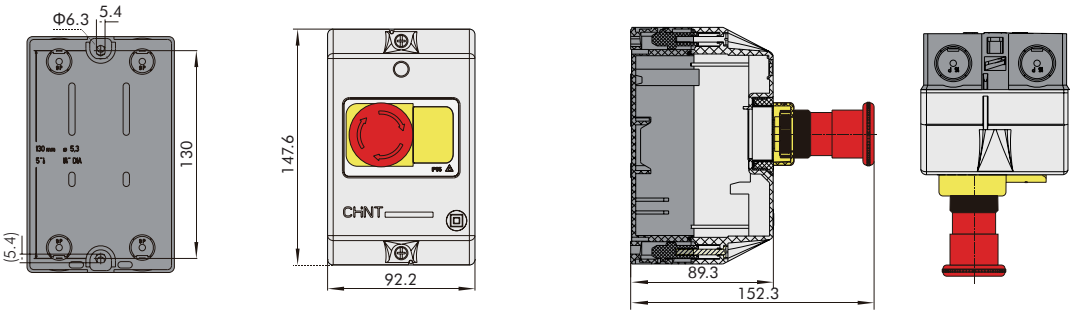

WPB-1

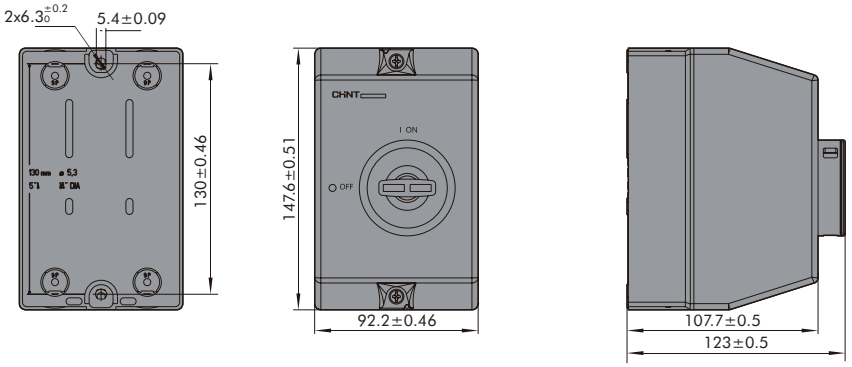

CC02-S2

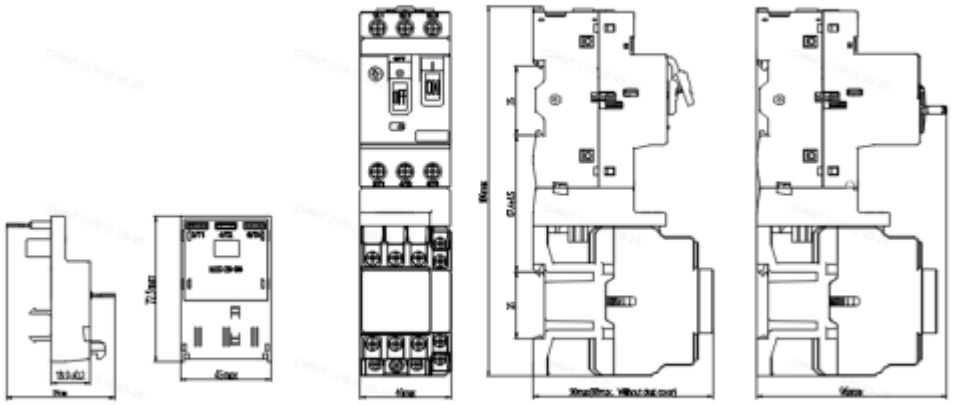

CC03-S2

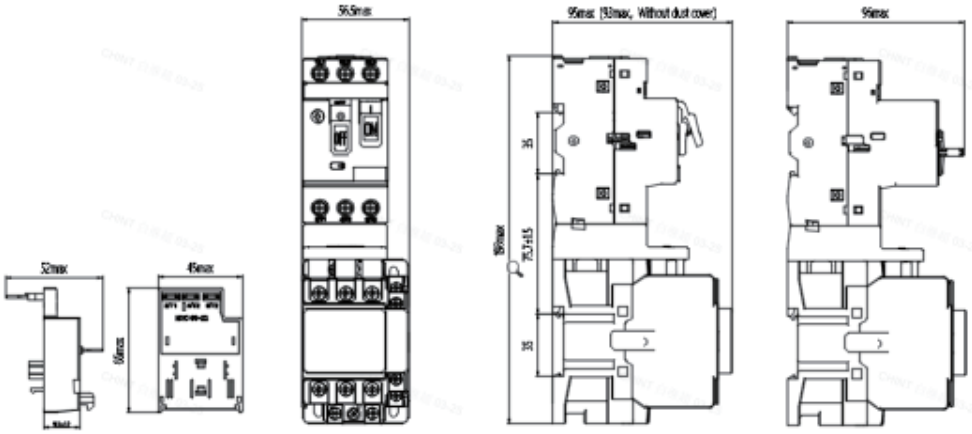

CC08-S2

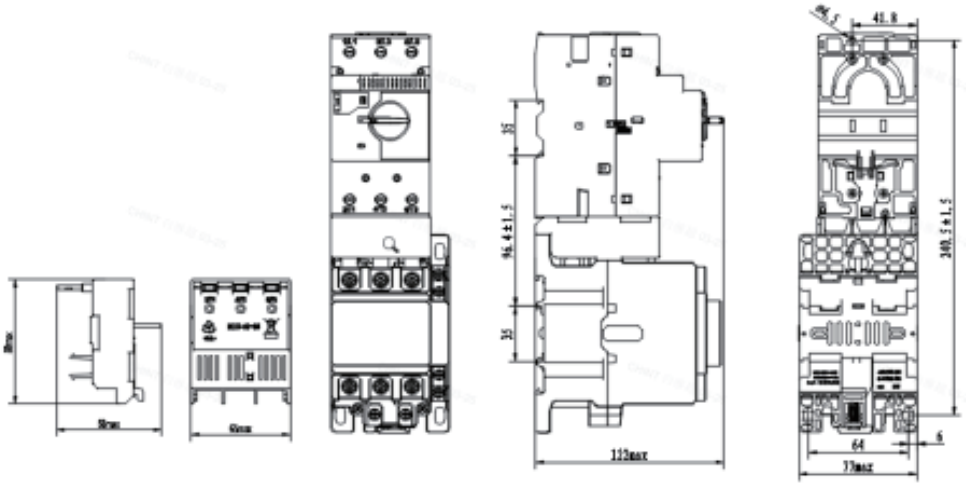

NS2	-	25	X	G	9~14A
Product Series		**Frame Size**	**Function**	**Color Matching**	**Setting Current Scope**
		25 32 80	Blank: pushbutton operating (frame size 25 and 32) rotary handle operating (frame size 80) X: rotary handle operating (frame size 25 and 32) B: pushbutton operating (frame size 80) H: high breaking capacity (frame size 32, rotary handle operating) M: electromagnetic protection only, without thermal overload protection	Blank: conventional type; G: New color appearance(Dark Gray)	Frame Size 25(X): 0.1~0.16A 0.16~0.25A 0.25~0.4A 0.4~0.63A 0.63~1A 1~1.6A 1.6~2.5A 2.5~4A 4~6.3A 6~10A 9~14A 13~18A 17~23A 20~25A Frame Size 25M: 0.16A 0.25A 0.4A 0.63A 1A 1.6A 2.5A 4A 6.3A 10A 14A 18A 23A 25A Frame Size 32(X): 24~32A
					Frame Size 32H: 0.1~0.16A 0.16~0.25A 0.25~0.4A 0.4~0.63A 0.63~1A 1~1.6A 1.6~2.5A 2.5~4A 4~6.3A 6~10A 9~14A 13~18A 17~23A 20~25A 24~32A Frame Size 80: 20~25A 23~32A 30~40A 37~50A 48~65A 63~80A Frame Size 80B: 16~25A 25~40A 40~63A 56~80A

NS2 AC Motor Starter 25~80A

Frame Size	Auxiliary Contacts	Setting Current	Model Description	Code
25A	-	0.1-0.16A	NS2-25 0.1-0.16A	495072
25A	-	0.16-0.25A	NS2-25 0.16-0.25A	495073
25A	-	0.25-0.4A	NS2-25 0.25-0.4A	495074
25A	-	0.4-0.63A	NS2-25 0.4-0.63A	495075
25A	-	0.63-1A	NS2-25 0.63-1A	495076
25A	-	1-1.6A	NS2-25 1-1.6A	495077
25A	-	1.6-2.5A	NS2-25 1.6-2.5A	495078
25A	-	2.5-4A	NS2-25 2.5-4A	495079
25A	-	4-6.3A	NS2-25 4-6.3A	495080
25A	-	6-10A	NS2-25 6-10A	495081
25A	-	9-14A	NS2-25 9-14A	495082
25A	-	13-18A	NS2-25 13-18A	495083
25A	-	17-23A	NS2-25 17-23A	495084
25A	-	20-25A	NS2-25 20-25A	495085
25A	-	0.1-0.16A	NS2-25X 0.1-0.16A	495176
25A	-	0.16-0.25A	NS2-25X 0.16-0.25A	495177
25A	-	0.25-0.4A	NS2-25X 0.25-0.4A	495178
25A	-	0.4-0.63A	NS2-25X 0.4-0.63A	495179
25A	-	0.63-1A	NS2-25X 0.63-1A	495180
25A	-	1-1.6A	NS2-25X 1-1.6A	495181
25A	-	1.6-2.5A	NS2-25X 1.6-2.5A	495182
25A	-	2.5-4A	NS2-25X 2.5-4A	495183
25A	-	4-6.3A	NS2-25X 4-6.3A	495184
25A	-	6-10A	NS2-25X 6-10A	495185
25A	-	9-14A	NS2-25X 9-14A	495186
25A	-	13-18A	NS2-25X 13-18A	495187
25A	-	17-23A	NS2-25X 17-23A	495188
25A	-	20-25A	NS2-25X 20-25A	495189
25A	-	0.16A	NS2-25M 0.16A	495190
25A	-	0.25A	NS2-25M 0.25A	495191
25A	-	0.4A	NS2-25M 0.4A	495192
25A	-	0.63A	NS2-25M 0.63A	495193
25A	-	1A	NS2-25M 1A	495194
25A	-	1.6A	NS2-25M 1.6A	495195
25A	-	2.5A	NS2-25M 2.5A	495196
25A	-	4A	NS2-25M 4A	495197
25A	-	6.3A	NS2-25M 6.3A	495198
25A	-	10A	NS2-25M 10A	495199
25A	-	14A	NS2-25M 14A	495200
25A	-	18A	NS2-25M 18A	495201
25A	-	23A	NS2-25M 23A	495202
25A	-	25A	NS2-25M 25A	495203

Frame Size	Auxiliary Contacts	Setting Current	Model Description	Code
32A	-	24-32A	NS2-32 24-32A	146475
32A	-	0.1-0.16A	NS2-32H 0.1-0.16A	253592
32A	-	0.16-0.25A	NS2-32H 0.16-0.25A	253593
32A	-	0.25-0.4A	NS2-32H 0.25-0.4A	253594
32A	-	0.4-0.63A	NS2-32H 0.4-0.63A	253595
32A	-	0.63-1A	NS2-32H 0.63-1A	253596
32A	-	1-1.6A	NS2-32H 1-1.6A	253597
32A	-	1.6-2.5A	NS2-32H 1.6-2.5A	253598
32A	-	2.5-4A	NS2-32H 2.5-4A	253599
32A	-	4-6.3A	NS2-32H 4-6.3A	253600
32A	-	6-10A	NS2-32H 6-10A	253601
32A	-	9-14A	NS2-32H 9-14A	253602
32A	-	13-18A	NS2-32H 13-18A	253603
32A	-	17-23A	NS2-32H 17-23A	253604
32A	-	20-25A	NS2-32H 20-25A	253605
32A	-	24-32A	NS2-32H 24-32A	253606
32A	-	24-32A	NS2-32X 24-32A	139373
80A	-	20-25A	NS2-80 20-25A	279720
80A	-	23-32A	NS2-80 23-32A	279721
80A	-	30-40A	NS2-80 30-40A	279722
80A	-	37-50A	NS2-80 37-50A	279723
80A	-	48-65A	NS2-80 48-65A	279724
80A	-	63-80A	NS2-80 63-80A	279725
80A	1NO+1NC	20-25A	NS2-80/AU11 20-25A	279708
80A	1NO+1NC	23-32A	NS2-80/AU11 23-32A	279709
80A	1NO+1NC	30-40A	NS2-80/AU11 30-40A	279710
80A	1NO+1NC	37-50A	NS2-80/AU11 37-50A	279711
80A	1NO+1NC	48-65A	NS2-80/AU11 48-65A	279712
80A	1NO+1NC	63-80A	NS2-80/AU11 63-80A	279713
80A	2NO	20-25A	NS2-80/AU20 20-25A	279714
80A	2NO	23-32A	NS2-80/AU20 23-32A	279715
80A	2NO	30-40A	NS2-80/AU20 30-40A	279716
80A	2NO	37-50A	NS2-80/AU20 37-50A	279717
80A	2NO	48-65A	NS2-80/AU20 48-65A	279718
80A	2NO	63-80A	NS2-80/AU20 63-80A	279719
80A	-	16A-25A	NS2-80B 16A-25A	495086
80A	-	25A-40A	NS2-80B 25A-40A	495087
80A	-	40A-63A	NS2-80B 40A-63A	495088
80A	-	56A-80A	NS2-80B 56A-80A	495089

Frame Size	Auxiliary Contacts	Setting Current	Model Description	Code
25A	-	0.1-0.16A	NS2-25G 0.1-0.16A	599646
25A	-	0.16-0.25A	NS2-25G 0.16-0.25A	599647
25A	-	0.25-0.4A	NS2-25G 0.25-0.4A	599648
25A	-	0.4-0.63A	NS2-25G 0.4-0.63A	599649
25A	-	0.63-1A	NS2-25G 0.63-1A	599650
25A	-	1-1.6A	NS2-25G 1-1.6A	599651
25A	-	1.6-2.5A	NS2-25G 1.6-2.5A	599652
25A	-	2.5-4A	NS2-25G 2.5-4A	599653
25A	-	4-6.3A	NS2-25G 4-6.3A	599654
25A	-	6-10A	NS2-25G 6-10A	599655
25A	-	9-14A	NS2-25G 9-14A	599656
25A	-	13-18A	NS2-25G 13-18A	599657
25A	-	17-23A	NS2-25G 17-23A	599658
25A	-	20-25A	NS2-25G 20-25A	599659
25A	-	0.1-0.16A	NS2-25XG 0.1-0.16A	599670
25A	-	0.16-0.25A	NS2-25XG 0.16-0.25A	599671
25A	-	0.25-0.4A	NS2-25XG 0.25-0.4A	599672
25A	-	0.4-0.63A	NS2-25XG 0.4-0.63A	599673
25A	-	0.63-1A	NS2-25XG 0.63-1A	599674
25A	-	1-1.6A	NS2-25XG 1-1.6A	599675
25A	-	1.6-2.5A	NS2-25XG 1.6-2.5A	599676
25A	-	2.5-4A	NS2-25XG 2.5-4A	599677
25A	-	4-6.3A	NS2-25XG 4-6.3A	599678
25A	-	6-10A	NS2-25XG 6-10A	599680
25A	-	9-14A	NS2-25XG 9-14A	599679
25A	-	13-18A	NS2-25XG 13-18A	599681
25A	-	17-23A	NS2-25XG 17-23A	599682
25A	-	20-25A	NS2-25XG 20-25A	599683
32A	-	24-32A	NS2-32G 24-32A	599685
32A	-	24-32A	NS2-32XG 24-32A	599684
80A	-	16A-25A	NS2-80BG 16A-25A	599660
80A	-	25A-40A	NS2-80BG 25A-40A	599661
80A	-	40A-63A	NS2-80BG 40A-63A	599662
80A	-	56A-80A	NS2-80BG 56A-80A	599663
80A	-	20-25A	NS2-80G 20-25A	599664
80A	-	23A-32A	NS2-80G 23A-32A	599665
80A	-	30A-40A	NS2-80G 30A-40A	599666
80A	-	37A-50A	NS2-80G 37A-50A	599667
80A	-	48A-65A	NS2-80G 48A-65A	599668
80A	-	63A-80A	NS2-80G 63A-80A	599669